ZT15
Pressure Transmitters for Semiconductor Industry

Outline

These are pressure transmitters designed for semiconductor industry, in which pressures are converted into electric signals and transmitted by the sensing element equipped with evaporation coating type semiconductor strain gauge and a built-in electronic circuit. We provide two types of pressure transducers with UC / EP Grade for high-purity gas and BA / GP Grade achieved the cost down of gas piping without impairing the airtightness.



Features

- Highly corrosion-resistant pressure sensors made of Co-Ni alloy or SUS316L are welded directly to the fitting, giving them excellent corrosion resistance, air-tightness, long-term stability and reliability.
  *Please confirm that material in contact with gas is suitable for it.
- Few dead spaces exist that may cause gas contamination.
- Available in gauge, compound and absolute pressures.
  (For the absolute pressure range, please refer to separate catalogs.)

RoHS

CE *1

*1 ZT15-1□□, ZT15-2□□, ZT15-A□□, and ZT15-B□□ are non-CE compliant.

List of grade

Cleanliness These pressure transmitters have been assembled, adjusted, inspected and packaged in a clean room, paying special attention for maintaining cleanliness.

Grade		UC (Ultra Clean)	BA (Bright Annealing)	EP (Electro Polishing)	GP (General Purpose)
Surface roughness of gas contact		0.18μm Ra Avg. 0.7μm Rz Max.	Approx. Rz 2.5μm	0.18μm Ra Avg.	0.5μm Ra Avg.
Wetted parts	Pressure sensor	Co-Ni alloy		SUS316L	
	Fitting *2	SUS316L		SUS316L	
Maximum allowable pressure *3		200% of rated pressure		150% of rated pressure	
Leakage (Helium leak rate)		5×10^{-12} Pa·m³/s and under		5×10^{-12} Pa·m³/s and under	
Particle		Zero count for size 0.1μm or greater (In our inspection standard)	————	Zero count for size 0.1μm or greater (In our inspection standard)	————
Cleaning		Ultra clearance (Cleaning)	Degreasing	Ultra clearance (Cleaning)	Degreasing
Operating media *4 (Recommended)		High-purity gas, semiconductor material gas, etc.	Purge gas, exhaust gas, etc.	High-purity gas, semiconductor material gas, etc.	Purge gas, exhaust gas, etc.

*2 For UC Grade, the pressure transmitter can be manufactured in DOUBLE MELT material by request. Please contact us.
*3 Allowable maximum pressure is the upper limit of pressure value which may safely be applied to the product and remain in specification once pressure is returned to the rated pressure range with a couple of times overpressurization for about 10 minutes. Effects of continuous overpressure are not guaranteed.
*4 Ensure that pressure media is compatible with wetted parts.
*UC / EP Grade rises with double packing (Filled with N_2).

Specification

Item	Description
Fluid	Process gasses for semiconductor industry
Pressure range	0 to 0.3, 0.5, 1, 2, 3.5, 5, 10, 20MPa -0.1 to 0.3, 0.5, 1, 2MPa
Fitting shape	Type T  Type S 
Connection	1/4, 3/8 UJR, VCR, CVC, etc.
Pressure sensor seal method	Welding type
Operating temperature	-20 to 70℃ (No freezing or condensation)
Storage temperature	-30 to 80℃ (No freezing or condensation)
Accuracy *1	±1.0%F.S. at 23℃ (Standard) or ±0.5%F.S. at 23℃ (Option) However, 0.5MPa range or greater can be specified
Temperature coefficient	± 0.1%F.S./℃ [Accuracy±1.0%F.S.] (Zero, Span) or ±0.05%F.S./℃ [Accuracy±0.5%F.S.] (Zero, Span)
Electrical characteristics	Transmission method: 2-wire system / 3-wire system Power source: 24V DC±10% / 24V DC±10% or 12V DC±10% Output: 4 to 20mA DC / 1 to 5V DC Load resistance: 500Ω maximum / 10kΩ minimum
CE compliance *2	Applicable Standards: EN61326-1: 2013; EN61326-2-3: 2013 *Please use it to connect to the indoor power distribution network which is not affected by the lightning surge voltage and power supply system switching transients.
Enclosure	Indoor use
Weight	Approx. 180 g (Excluding cable, varies depending on the fitting shape)

*1 Accuracy includes the effects of Linearity, Hysteresis and Repeatability.
*2 ZT15-1□□, ZT15-2□□, ZT15-A□□, and ZT15-B□□ are non-CE compliant.

Connector and cable

Connector (Plug):

R03-P6M (Manufactured by Tajimi Electronics Co., Ltd.)

Cable:

	Environmental temperature	Conductor		Cable outer diameter (mm)	Minimum bending radius (mm)
		Cross-section area (mm²)	Twisted conductors (pcs./mm)		
Heat resistant cable	-20 to 105℃	0.3	12/0.18	φ6.0	25

Wiring

2-wire system

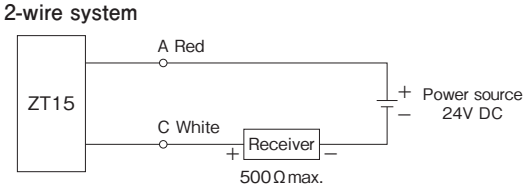

2-wire system Terminal distribution

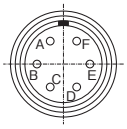

A-Red: Power source (+)
C-White: Power source (−)

3-wire system

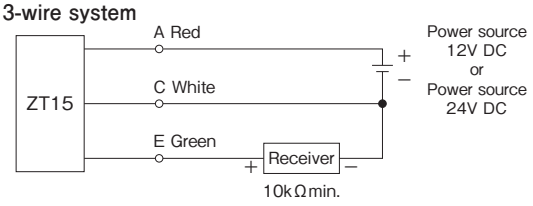

3-wire system Terminal distribution

A-Red: Power source (+)
C-White: Common
E-Green: Output (+)

Caution

Avoid installing in location where apparatus or atmosphere (excluding process media) could be cause of initiation of ignition or explosion under normal operating condition.

Dimensions 1

Internal Adjustment
Type T
Male Integrated

Unit: mm

UC/BA Grade

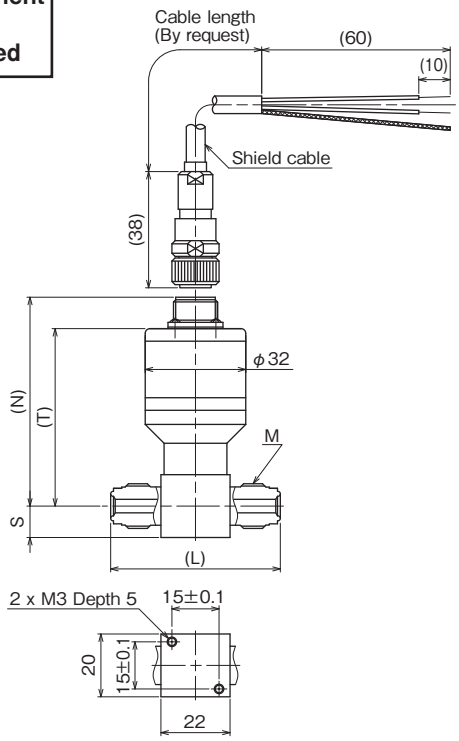

Compatible with 1/4 VCR

EP/GP Grade

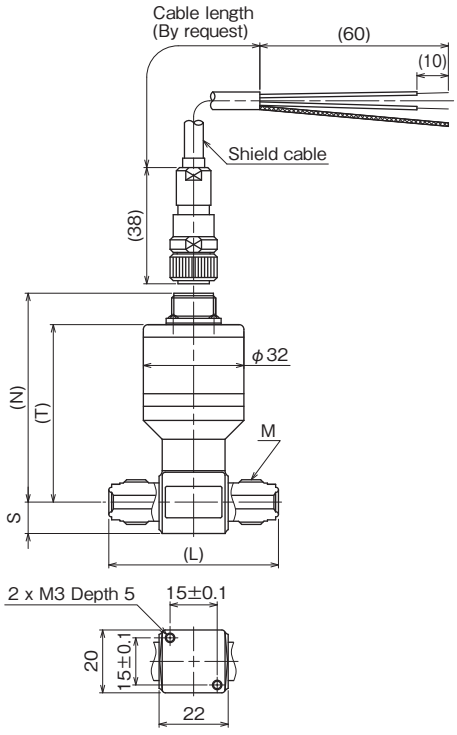

Compatible with 1/4 VCR

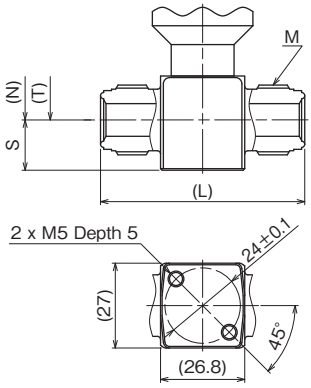

Compatible with 1/2 (3/8) VCR

Grade	Connection	Piping DIA.	Screw size M	Dimensions				Model number
				N	T	S	L	
UC	Compatible with VCR Male integrated	1/4	9/16-18UNF	66.5	56.5	10	54	ZT15-136, ZT15-M36

Grade	Connection	Piping DIA.	Screw size M	Dimensions				Model number
				N	T	S	L	
BA	Compatible with VCR Male integrated	1/4	9/16-18UNF	66.5	56.5	10	54	ZT15-13N, ZT15-M3N

Grade	Connection	Piping DIA.	Screw size M	Dimensions				Model number
				N	T	S	L	
EP	Compatible with VCR Male integrated	1/4	9/16-18UNF	66.5	56.5	10	54	ZT15-M3E
		1/2 (3/8)	7/8-14UNF	70.5	60.5	16	65	ZT15-M4E

Grade	Connection	Piping DIA.	Screw size M	Dimensions				Model number
				N	T	S	L	
GP	Compatible with VCR Male integrated	1/4	9/16-18UNF	66.5	56.5	10	54	ZT15-M3G

Dimensions 2

Internal Adjustment
Type T
Male nut/Female nut

Unit: mm

UC Grade

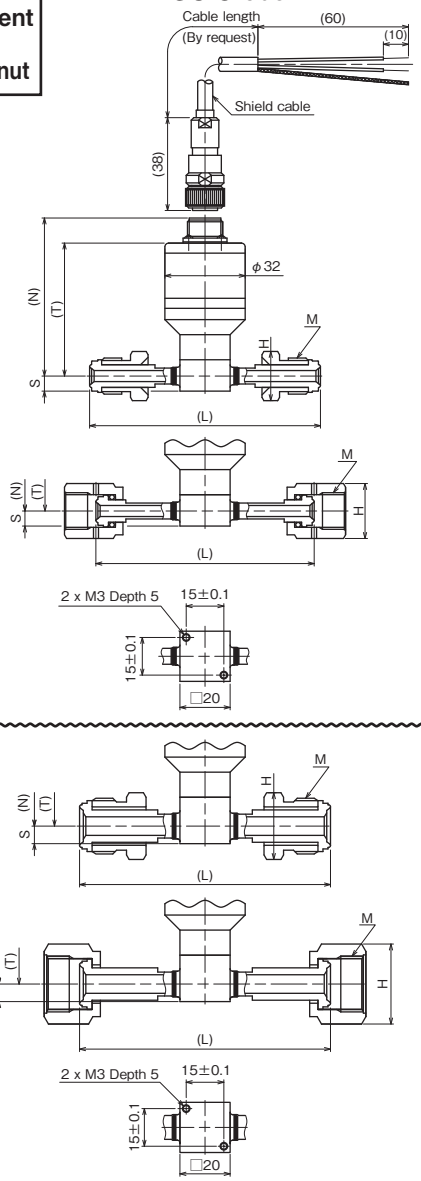

BA Grade

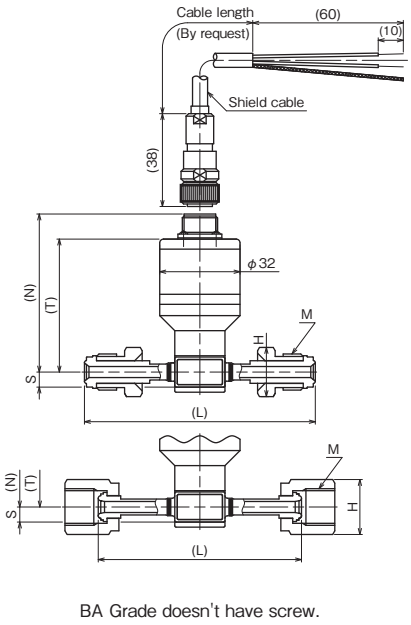

BA Grade doesn't have screw.

Grade	Connection	Piping DIA.	Screw size M	Dimensions					Model number
				N	T	S	H	L	
UC	VCR Male nut	1/4	9/16-18UNF	62.5	52.5	6	16 x 18.5 Hex.	86	ZT15-1J6, ZT15-MJ6
		3/8	7/8-14UNF	68	58	7	24 x 27.7 Hex.	90.5	ZT15-1K6, ZT15-MK6
	VCR Female nut (Bearings are not included)	1/4	9/16-18UNF	62.5	52.5	6	19 x 21.9 Hex.	80.8	ZT15-1L6, ZT15-ML6
		3/8	7/8-14UNF	68	58	7	27 x 31.2 Hex.	81.8	ZT15-1M6, ZT15-MM6
	UJR Male nut	1/4	9/16-18UNF	62.5	52.5	6	17 x 19.6 Hex.	87	ZT15-1N6, ZT15-MN6
		3/8	7/8-14UNF	68	58	7	23 x 26.6 Hex.	100	ZT15-1P6, ZT15-MP6
	UJR Female nut (With pure ring)	1/4	9/16-18UNF	62.5	52.5	6	19 x 21.9 Hex.	87	ZT15-1Q6, ZT15-MQ6
		3/8	7/8-14UNF	68	58	7	26 x 30 Hex.	100	ZT15-1R6, ZT15-MR6
	CVC Male nut	1/4	9/16-18UNF	62.5	52.5	6	15.8 x 18.2 Hex.	86	ZT15-1W6, ZT15-MW6
		3/8	7/8-14UNF	68	58	7	23.8 x 27.5 Hex.	90.6	ZT15-1X6, ZT15-MX6
	CVC Female nut (Bearings are not included)	1/4	9/16-18UNF	62.5	52.5	6	19 x 21.9 Hex.	80.8	ZT15-1Y6, ZT15-MY6
		3/8	7/8-14UNF	68	58	7	27 x 31.2 Hex.	82	ZT15-1Z6, ZT15-MZ6

Grade	Connection	Piping DIA.	Screw size M	Dimensions					Model number
				N	T	S	H	L	
BA	VCR Male nut	1/4	9/16-18UNF	63	53	6	16 x 18.5 Hex.	86	ZT15-1JN, ZT15-MJN
	VCR Female nut (Bearings are not included)						19 x 21.9 Hex.	80.8	ZT15-1LN, ZT15-MLN
	UJR Male nut						17 x 19.6 Hex.	92	ZT15-1NN, ZT15-MNN
	UJR Female nut (Without pure ring)						19 x 21.9 Hex.	81	ZT15-1QN, ZT15-MQN
	CVC Male nut						15.8 x 18.2 Hex.	86	ZT15-1WN, ZT15-MWN
	CVC Female nut (Bearings are not included)						19 x 21.9 Hex.	80.8	ZT15-1YN, ZT15-MYN

Dimensions 3

Internal Adjustment
Type T
Male nut/Female nut

EP/GP Grade

Unit: mm

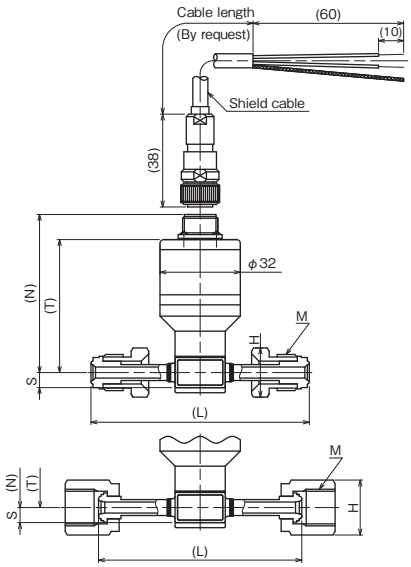

1/4UJR

＊There is no M3 screw on the piping diameter 1/4.

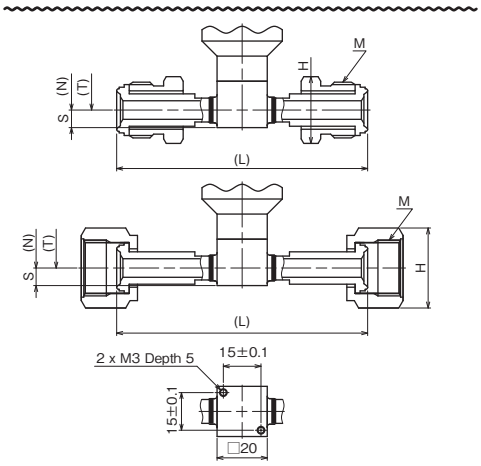

3/8UJR

Grade	Connection	Piping DIA.	Screw size M	Dimensions					Model number
				N	T	S	H	L	
EP	UJR Male nut	1/4	9/16-18UNF	63	53	6	17 x 19.6 Hex.	87	ZT15-MNE
		3/8	7/8-14UNF	68	58	7	23 x 26.6 Hex.	100	ZT15-MPE
	UJR Female nut (Without pure ring)	1/4	9/16-18UNF	63	53	6	19 x 21.9 Hex.	81	ZT15-MQE
		3/8	7/8-14UNF	68	58	7	26 x 30 Hex.	100	ZT15-MRE

Grade	Connection	Piping DIA.	Screw size M	Dimensions					Model number
				N	T	S	H	L	
GP	UJR Male nut	1/4	9/16-18UNF	63	53	6	17 x 19.6 Hex.	87	ZT15-MNG
	UJR Female nut (Without pure ring)						19 x 21.9 Hex.	81	ZT15-MQG

Dimensions 4

Internal Adjustment
Type S
Male Integrated

UC/BA/EP/GP Grade

Unit: mm

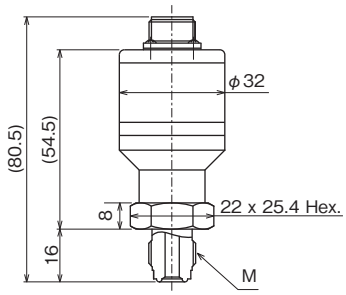

Compatible with 1/4 VCR

Grade	Connection	Piping DIA.	Screw size M	Model number
UC	Compatible with VCR Male integrated	1/4	9/16-18UNF	ZT15-236, ZT15-N36

Grade	Connection	Piping DIA.	Screw size M	Model number
BA	Compatible with VCR Male integrated	1/4	9/16-18UNF	ZT15-23N, ZT15-N3N

Grade	Connection	Piping DIA.	Screw size M	Model number
EP	Compatible with VCR Male integrated	1/4	9/16-18UNF	ZT15-N3E

Grade	Connection	Piping DIA.	Screw size M	Model number
GP	Compatible with VCR Male integrated	1/4	9/16-18UNF	ZT15-N3G

Dimensions 5

Internal Adjustment
Type S
Male nut/Female nut

UC/BA/EP/GP Grade

Unit: mm

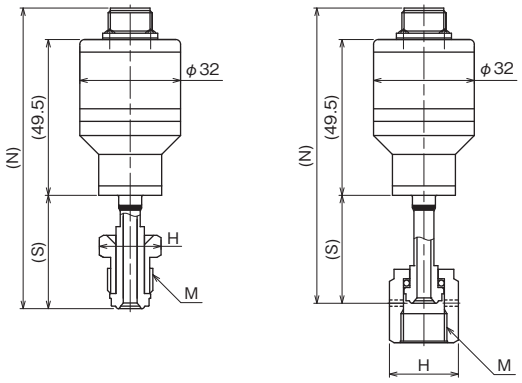

Grade	Connection	Piping DIA.	Screw size M	Dimensions			Model number
				N	S	H	
UC	VCR Male nut	1/4	9/16-18UNF	93.5	34	16 x 18.5 Hex.	ZT15-2J6, ZT15-NJ6
	VCR Female nut (Bearings are not included)			90.9	31.4	19 x 21.9 Hex.	ZT15-2L6, ZT15-NL6
	UJR Male nut			96.5	37	17 x 19.6 Hex.	ZT15-2N6, ZT15-NN6
	UJR Female nut (With pure ring)			94	34.5	19 x 21.9 Hex.	ZT15-2Q6, ZT15-NQ6
	CVC Male nut			95.5	36	15.8 x 18.2 Hex.	ZT15-2W6, ZT15-NW6
	CVC Female nut (Bearings are not included)			90.9	31.4	19 x 21.9 Hex.	ZT15-2Y6, ZT15-NY6

Grade	Connection	Piping DIA.	Screw size M	Dimensions			Model number
				N	S	H	
BA	VCR Male nut	1/4	9/16-18UNF	93.5	34	16 x 18.5 Hex.	ZT15-2JN, ZT15-NJN
	VCR Female nut (Bearings are not included)			81.3	21.8	19 x 21.9 Hex.	ZT15-2LN, ZT15-NLN
	UJR Male nut			96.5	37	17 x 19.6 Hex.	ZT15-2NN, ZT15-NNN
	UJR Female nut (Without pure ring)			81.2	21.7	19 x 21.9 Hex.	ZT15-2QN, ZT15-NQN
	CVC Male nut			95.5	36	15.8 x 18.2 Hex.	ZT15-2WN, ZT15-NWN
	CVC Female nut (Bearings are not included)			90.9	31.4	19 x 21.9 Hex.	ZT15-2YN, ZT15-NYN

Grade	Connection	Piping DIA.	Screw size M	Dimensions			Model number
				N	S	H	
EP	UJR Male nut	1/4	9/16-18UNF	94	34.5	17 x 19.6 Hex.	ZT15-NNE
	UJR Female nut (Without pure ring)			91	31.5	19 x 21.9 Hex.	ZT15-NQE

Grade	Connection	Piping DIA.	Screw size M	Dimensions			Model number
				N	S	H	
GP	UJR Male nut	1/4	9/16-18UNF	94	34.5	17 x 19.6 Hex.	ZT15-NNG
	UJR Female nut (Without pure ring)			91	31.5	19 x 21.9 Hex.	ZT15-NQG

Dimensions 6

External Adjustment
Type T
Male Integrated

Unit: mm

UC/BA Grade

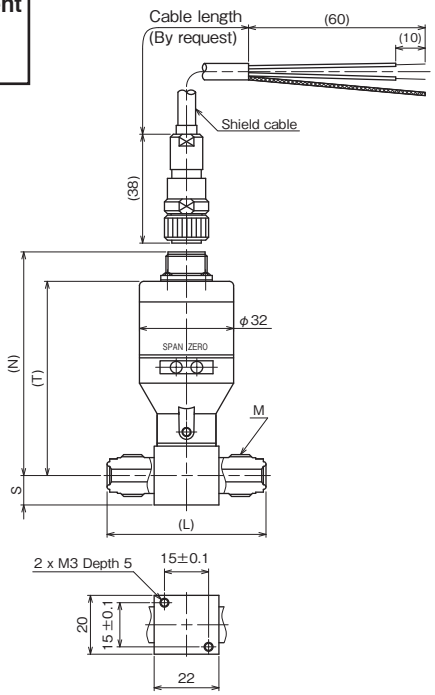

Compatible with 1/4 VCR

EP/GP Grade

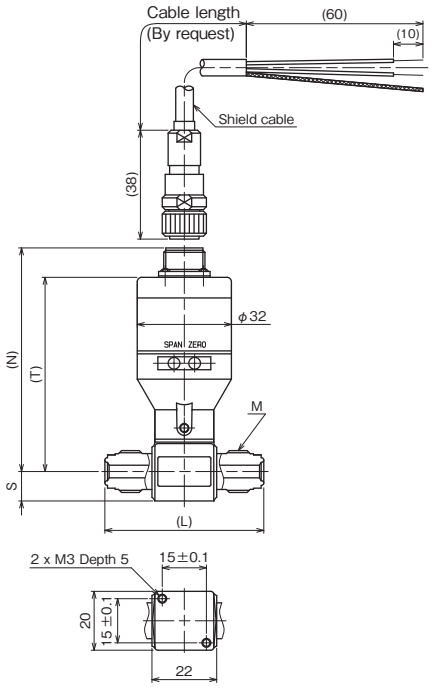

Compatible with 1/4 VCR

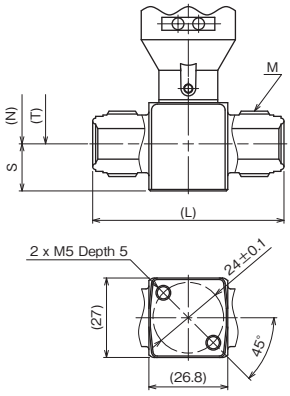

Compatible with 1/2 (3/8) VCR

Grade	Connection	Piping DIA.	Screw size M	Dimensions				Model number
				N	T	S	L	
UC	Compatible with VCR Male integrated	1/4	9/16-18UNF	76	66	10	54	ZT15-A36, ZT15-C36

Grade	Connection	Piping DIA.	Screw size M	Dimensions				Model number
				N	T	S	L	
BA	Compatible with VCR Male integrated	1/4	9/16-18UNF	76	66	10	54	ZT15-A3N, ZT15-C3N

Grade	Connection	Piping DIA.	Screw size M	Dimensions				Model number
				N	T	S	L	
EP	Compatible with VCR Male integrated	1/4	9/16-18UNF	76	66	10	54	ZT15-C3E
		1/2 (3/8)	7/8-14UNF	80	70	16	65	ZT15-C4E

Grade	Connection	Piping DIA.	Screw size M	Dimensions				Model number
				N	T	S	L	
GP	Compatible with VCR Male integrated	1/4	9/16-18UNF	76	66	10	54	ZT15-C3G

Dimensions 7

External Adjustment
Type T
Male nut/Female nut

Unit: mm

UC Grade

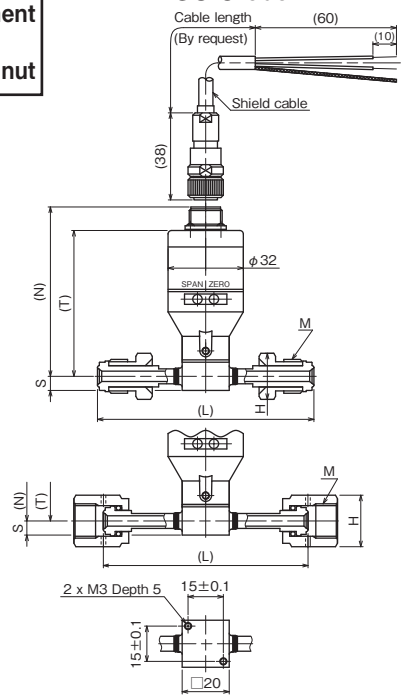

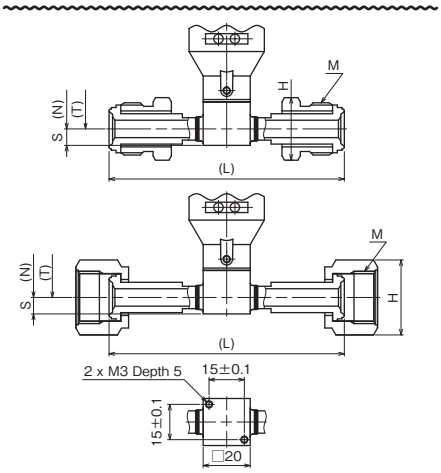

BA Grade

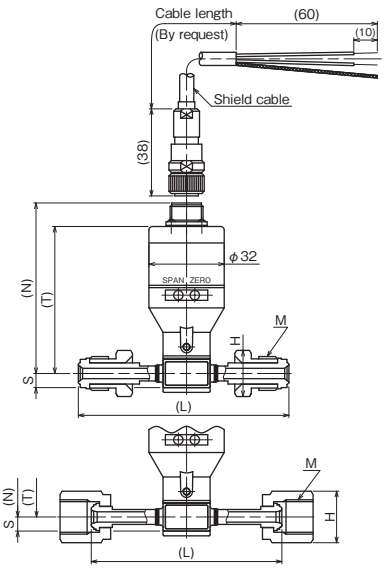

＊BA Grade doesn't have screw.

Grade	Connection	Piping DIA.	Screw size M	Dimensions					Model number
				N	T	S	H	L	
UC	VCR Male nut	1/4	9/16-18UNF	72	62	6	16 x 18.5 Hex.	86	ZT15-AJ6, ZT15-CJ6
		3/8	7/8-14UNF	77.5	67.5	7	24 x 27.7 Hex.	90.5	ZT15-AK6, ZT15-CK6
	VCR Female nut (Bearings are not included)	1/4	9/16-18UNF	72	62	6	19 x 21.9 Hex.	80.8	ZT15-AL6, ZT15-CL6
		3/8	7/8-14UNF	77.5	67.5	7	27 x 31.2 Hex.	81.8	ZT15-AM6, ZT15-CM6
	UJR Male nut	1/4	9/16-18UNF	72	62	6	17 x 19.6 Hex.	87	ZT15-AN6, ZT15-CN6
		3/8	7/8-14UNF	77.5	67.5	7	23 x 26.6 Hex.	100	ZT15-AP6, ZT15-CP6
	UJR Female nut (With pure ring)	1/4	9/16-18UNF	72	62	6	19 x 21.9 Hex.	87	ZT15-AQ6, ZT15-CQ6
		3/8	7/8-14UNF	77.5	67.5	7	26 x 30 Hex.	100	ZT15-AR6, ZT15-CR6
	CVC Male nut	1/4	9/16-18UNF	72	62	6	15.8 x 18.2 Hex.	86	ZT15-AW6, ZT15-CW6
		3/8	7/8-14UNF	77.5	67.5	7	23.8 x 27.5 Hex.	90.6	ZT15-AX6, ZT15-CX6
	CVC Female nut (Bearings are not included)	1/4	9/16-18UNF	72	62	6	19 x 21.9 Hex.	80.8	ZT15-AY6, ZT15-CY6
		3/8	7/8-14UNF	77.5	67.5	7	27 x 31.2 Hex.	82	ZT15-AZ6, ZT15-CZ6

Grade	Connection	Piping DIA.	Screw size M	Dimensions					Model number
				N	T	S	H	L	
BA	VCR Male nut	1/4	9/16-18UNF	72.5	62.5	6	16 x 18.5 Hex.	86	ZT15-AJN, ZT15-CJN
	VCR Female nut (Bearings are not included)						19 x 21.9 Hex.	80.8	ZT15-ALN, ZT15-CLN
	UJR Male nut						17 x 19.6 Hex.	92	ZT15-ANN, ZT15-CNN
	UJR Female nut (Without pure ring)						19 x 21.9 Hex.	81	ZT15-AQN, ZT15-CQN
	CVC Male nut						15.8 x 18.2 Hex.	86	ZT15-AWN, ZT15-CWN
	CVC Female nut (Bearings are not included)						19 x 21.9 Hex.	80.8	ZT15-AYN, ZT15-CYN

Dimensions 8

External Adjustment
Type T
Male nut/Female nut

EP/GP Grade

Unit: mm

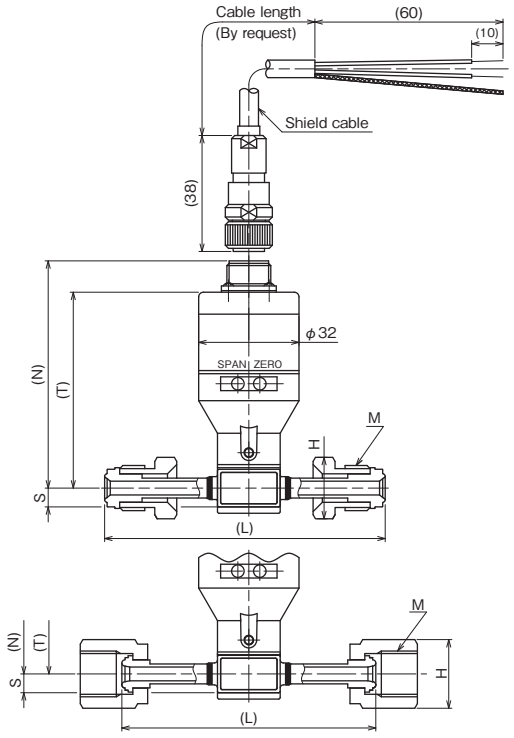

1/4UJR

＊There is no M3 screw on the piping diameter 1/4.

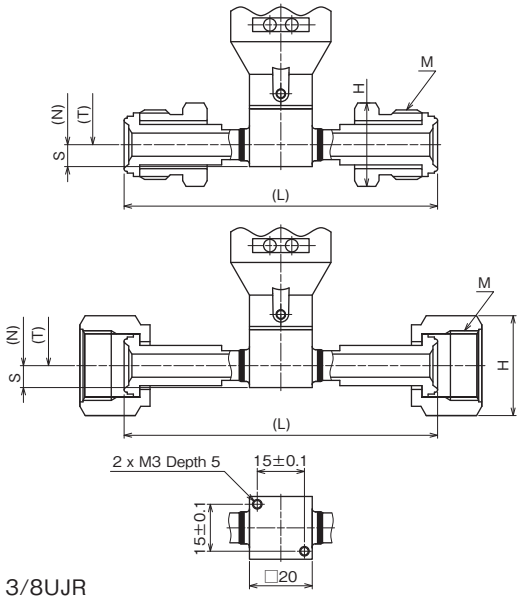

3/8UJR

Grade	Connection	Piping DIA.	Screw size M	Dimensions					Model number
				N	T	S	H	L	
EP	UJR Male nut	1/4	9/16-18UNF	72.5	62.5	6	17 x 19.6 Hex.	87	ZT15-CNE
		3/8	7/8-14UNF	77.5	67.5	7	23 x 26.6 Hex.	100	ZT15-CPE
	UJR Female nut (Without pure ring)	1/4	9/16-18UNF	72.5	62.5	6	19 x 21.9 Hex.	81	ZT15-CQE
		3/8	7/8-14UNF	77.5	67.5	7	26 x 30 Hex.	100	ZT15-CRE

Grade	Connection	Piping DIA.	Screw size M	Dimensions					Model number
				N	T	S	H	L	
GP	UJR Male nut	1/4	9/16-18UNF	72.5	62.5	6	17 x 19.6 Hex.	87	ZT15-CNG
	UJR Female nut (Without pure ring)						19 x 21.9 Hex.	81	ZT15-CQG

Dimensions 9

External Adjustment
Type S
Male Integrated

UC/BA/EP/GP Grade

Unit: mm

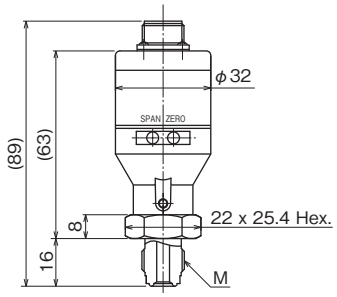

Compatible with 1/4 VCR

Grade	Connection	Piping DIA.	Screw size M	Model number
UC	Compatible with VCR Male integrated	1/4	9/16-18UNF	ZT15-B36, ZT15-D36

Grade	Connection	Piping DIA.	Screw size M	Model number
BA	Compatible with VCR Male integrated	1/4	9/16-18UNF	ZT15-B3N, ZT15-D3N

Grade	Connection	Piping DIA.	Screw size M	Model number
EP	Compatible with VCR Male integrated	1/4	9/16-18UNF	ZT15-D3E

Grade	Connection	Piping DIA.	Screw size M	Model number
GP	Compatible with VCR Male integrated	1/4	9/16-18UNF	ZT15-D3G

Dimensions 10

External Adjustment
Type S
Male nut/Female nut

UC/BA/EP/GP Grade

Unit: mm

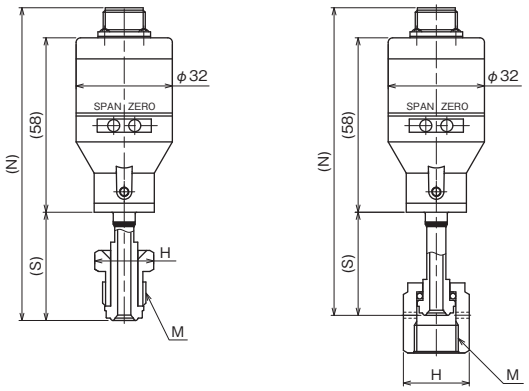

Grade	Connection	Piping DIA.	Screw size M	Dimensions			Model number
				N	S	H	
UC	VCR Male nut	1/4	9/16-18UNF	102	34	16 x 18.5 Hex.	ZT15-BJ6, ZT15-DJ6
	VCR Female nut (Bearings are not included)			99.4	31.4	19 x 21.9 Hex.	ZT15-BL6, ZT15-DL6
	UJR Male nut			105	37	17 x 19.6 Hex.	ZT15-BN6, ZT15-DN6
	UJR Female nut (With pure ring)			102.5	34.5	19 x 21.9 Hex.	ZT15-BQ6, ZT15-DQ6
	CVC Male nut			104	36	15.8 x 18.2 Hex.	ZT15-BW6, ZT15-DW6
	CVC Female nut (Bearings are not included)			99.4	31.4	19 x 21.9 Hex.	ZT15-BY6, ZT15-DY6

Grade	Connection	Piping DIA.	Screw size M	Dimensions			Model number
				N	S	H	
BA	VCR Male nut	1/4	9/16-18UNF	102	34	16 x 18.5 Hex.	ZT15-BJN, ZT15-DJN
	VCR Female nut (Bearings are not included)			89.8	21.8	19 x 21.9 Hex.	ZT15-BLN, ZT15-DLN
	UJR Male nut			105	37	17 x 19.6 Hex.	ZT15-BNN, ZT15-DNN
	UJR Female nut (Without pure ring)			89.7	21.7	19 x 21.9 Hex.	ZT15-BQN, ZT15-DQN
	CVC Male nut			104	36	15.8 x 18.2 Hex.	ZT15-BWN, ZT15-DWN
	CVC Female nut (Bearings are not included)			99.4	31.4	19 x 21.9 Hex.	ZT15-BYN, ZT15-DYN

Grade	Connection	Piping DIA.	Screw size M	Dimensions			Model number
				N	S	H	
EP	UJR Male nut	1/4	9/16-18UNF	102.5	34.5	17 x 19.6 Hex.	ZT15-DNE
	UJR Female nut (Without pure ring)			99.5	31.5	19 x 21.9 Hex.	ZT15-DQE

Grade	Connection	Piping DIA.	Screw size M	Dimensions			Model number
				N	S	H	
GP	UJR Male nut	1/4	9/16-18UNF	102.5	34.5	17 x 19.6 Hex.	ZT15-DNG
	UJR Female nut (Without pure ring)			99.5	31.5	19 x 21.9 Hex.	ZT15-DQG

Pressure Transmitters, UC Grade CE compliant

Model number configuration

Please specify the model number, each specs and the range for ordering.

Model

Z	T	1	5	—	①	②	6	—	④	⑤	⑥	⑦	⑧	⑨	⑩	⑪	⑫	⑬	⑭	⑮
Pressure Transmitter UC Grade					Model number				Selective spec.				Additional spec. (Option)							

① Mounting *1

C	Type T, External adjustment connector type, CE compliant
D	Type S, External adjustment connector type, CE compliant
M	Type T, Internal adjustment connector type, CE compliant
N	Type S, Internal adjustment connector type, CE compliant

② Connection

			Type S	Type T
3	1/4	Compatible with VCR Male integrated	○	○
J	1/4	VCR Male nut	○	○
K	3/8		×	○
L	1/4	VCR Female nut (Bearings are not included)	○	○
M	3/8		×	○
N	1/4	UJR Male nut	○	○
P	3/8		×	○
Q	1/4	UJR Female nut (With pure ring)	○	○
R	3/8		×	○
W	1/4	CVC Male nut	○	○
X	3/8		×	○
Y	1/4	CVC Female nut (Bearings are not included)	○	○
Z	3/8		×	○

③ Wetted parts by grade *2

6	UC Grade ・Pressure sensor: Co-Ni alloy (All welding) ・Fitting: SUS316L

④ Pressure range

Please specify the pressure range and units separately besides selection of range code.

C	-0.1 to 0.3MPa
D	-0.1 to 0.5MPa
E	-0.1 to 1MPa
F	-0.1 to 2MPa
1	0 to 0.3MPa
2	0 to 0.5MPa
3	0 to 1MPa
4	0 to 2MPa
5	0 to 3.5MPa
6	0 to 5MPa
7	0 to 10MPa
8	0 to 20MPa

⑤ Accuracy

5	±0.5%F.S. (0.5MPa range or greater can be specified)
7	±1.0%F.S.

⑥ Power source

1	24V DC±10%
6	12V DC±10% (3-wire system only)

⑦ Output

1	4 to 20 mA DC (2-wire system)
8	1 to 5V DC (3-wire system)

⑧ Adjustment cable specification (A heat resistant shield cable)

0	Nil
1	Cable length: 1 m
2	Cable length: 2 m
3	Cable length: 3 m (Standard)
5	Cable length: 5 m
9	Others length specification

⑮ Document

0	Nil
1	Required (Please specify the desired documents separately.) Submission drawings, instruction manual, inspection procedure, mill test report, test report (1 pc 1 copy), inspection / traceability certificate, strength calculation, attended inspection

*1 ZT15-1□□, ZT15-2□□, ZT15-A□□, and ZT15-B□□ are non-CE compliant.

*2 For UC Grade, the pressure transmitter can be manufactured in DOUBLE MELT material by request. Please contact us.

*Specify "X" if there is no applicable specification.

Pressure Transmitters, UC Grade Non-CE compliant

Model number configuration

Please specify the model number, each specs and the range for ordering.

Model

Z	T	1	5	—	①	②	③	—	④	⑤	⑥	⑦	⑧	⑨	⑩	⑪	⑫	⑬	⑭	⑮
							6							×	×	×	×	×	×	

Pressure Transmitter
UC Grade
(Non-CE compliant)

Model number | Selective spec. | Additional spec. (Option)

① Mounting *1

1	Type T, Internal adjustment connector type
2	Type S, Internal adjustment connector type
A	Type T, External adjustment connector type
B	Type S, External adjustment connector type

② Connection

			Type S	Type T
3	1/4	Compatible with VCR Male integrated	○	○
J	1/4	VCR Male nut	○	○
K	3/8		×	○
L	1/4	VCR Female nut (Bearings are not included)	○	○
M	3/8		×	○
N	1/4	UJR Male nut	○	○
P	3/8		×	○
Q	1/4	UJR Female nut (With pure ring)	○	○
R	3/8		×	○
W	1/4	CVC Male nut	○	○
X	3/8		×	○
Y	1/4	CVC Female nut (Bearings are not included)	○	○
Z	3/8		×	○

③ Wetted parts by grade *2

6	UC Grade ·Pressure sensor: Co-Ni alloy (All welding) ·Fitting: SUS316L

④ Pressure range

Please specify the pressure range and units separately besides selection of range code.

C	-0.1 to 0.3MPa
D	-0.1 to 0.5MPa
E	-0.1 to 1MPa
F	-0.1 to 2MPa
1	0 to 0.3MPa
2	0 to 0.5MPa
3	0 to 1MPa
4	0 to 2MPa
5	0 to 3.5MPa
6	0 to 5MPa
7	0 to 10MPa
8	0 to 20MPa

⑤ Accuracy

5	±0.5%F.S. (0.5MPa range or greater can be specified)
7	±1.0%F.S.

⑥ Power source

1	24V DC±10%
6	12V DC±10% (3-wire system only)

⑦ Output

1	4 to 20 mA DC (2-wire system)
8	1 to 5V DC (3-wire system)

⑧ Adjustment cable specification (A heat resistant shield cable)

0	Nil
1	Cable length: 1 m
2	Cable length: 2 m
3	Cable length: 3 m (Standard)
5	Cable length: 5 m
9	Others length specification

⑮ Document

0	Nil
1	Required (Please specify the desired documents separately.) Submission drawings, instruction manual, inspection procedure, mill test report, test report (1 pc 1 copy), inspection / traceability certificate, strength calculation, attended inspection

*1 ZT15-1□□, ZT15-2□□, ZT15-A□□, and ZT15-B□□ are non-CE compliant.

*2 For UC Grade, the pressure transmitter can be manufactured in DOUBLE MELT material by request. Please contact us.

*Specify "X" if there is no applicable specification.

Pressure Transmitters, BA Grade CE compliant

Model number configuration

Please specify the model number, each specs and the range for ordering.

Model

Z	T	1	5	—	①	②	③	—	④	⑤	⑥	⑦	⑧	⑨	⑩	⑪	⑫	⑬	⑭	⑮
Pressure Transmitter BA Grade							N							×	×	×	×	×	×	

Model number | Selective spec. | Additional spec. (Option)

① Mounting *1

C	Type T, External adjustment connector type, CE compliant
D	Type S, External adjustment connector type, CE compliant
M	Type T, Internal adjustment connector type, CE compliant
N	Type S, Internal adjustment connector type, CE compliant

② Connection

3	1/4	Compatible with VCR Male integrated
J	1/4	VCR Male nut
L	1/4	VCR Female nut (Bearings are not included)
N	1/4	UJR Male nut
Q	1/4	UJR Female nut (Without pure ring)
W	1/4	CVC Male nut
Y	1/4	CVC Female nut (Bearings are not included)

③ Wetted parts by grade

N	BA Grade ·Pressure sensor: Co-Ni alloy (All welding) ·Fitting: SUS316L

④ Pressure range

Please specify the pressure range and units separately besides selection of range code.

C	-0.1 to 0.3MPa
D	-0.1 to 0.5MPa
E	-0.1 to 1MPa
F	-0.1 to 2MPa
1	0 to 0.3MPa
2	0 to 0.5MPa
3	0 to 1MPa
4	0 to 2MPa
5	0 to 3.5MPa
6	0 to 5MPa
7	0 to 10MPa
8	0 to 20MPa

⑤ Accuracy

5	±0.5%F.S. (0.5MPa range or greater can be specified)
7	±1.0%F.S.

⑥ Power source

1	24V DC±10%
6	12V DC±10% (3-wire system only)

⑦ Output

1	4 to 20 mA DC (2-wire system)
8	1 to 5V DC (3-wire system)

⑧ Adjustment cable specification (A heat resistant shield cable)

0	Nil
1	Cable length: 1 m
2	Cable length: 2 m
3	Cable length: 3 m (Standard)
5	Cable length: 5 m
9	Others length specification

⑮ Document

0	Nil
1	Required (Please specify the desired documents separately.) Submission drawings, instruction manual, inspection procedure, mill test report, test report (1 pc 1 copy), inspection / traceability certificate, strength calculation, attended inspection

*1 ZT15-1□□, ZT15-2□□, ZT15-A□□, and ZT15-B□□ are non-CE compliant.

*Specify "X" if there is no applicable specification.

Pressure Transmitters, BA Grade Non-CE compliant

Model number configuration

Please specify the model number, each specs and the range for ordering.

Model

Z	T	1	5	—				—													
					①	②	③		④	⑤	⑥	⑦	⑧	⑨	⑩	⑪	⑫	⑬	⑭	⑮

Pressure Transmitter
BA Grade
(Non-CE compliant)

Model number				Selective spec.	Additional spec. (Option)
① Mounting *1	1			Type T, Internal adjustment connector type	
	2			Type S, Internal adjustment connector type	
	A			Type T, External adjustment connector type	
	B			Type S, External adjustment connector type	
② Connection	3	1/4		Compatible with VCR Male integrated	
	J	1/4		VCR Male nut	
	L	1/4		VCR Female nut (Bearings are not included)	
	N	1/4		UJR Male nut	
	Q	1/4		UJR Female nut (Without pure ring)	
	W	1/4		CVC Male nut	
	Y	1/4		CVC Female nut (Bearings are not included)	
③ Wetted parts by grade	N			BA Grade ·Pressure sensor: Co-Ni alloy (All welding) ·Fitting: SUS316L	
④ Pressure range	C			-0.1 to 0.3MPa	
	D			-0.1 to 0.5MPa	
	E			-0.1 to 1MPa	
	F			-0.1 to 2MPa	
	1			0 to 0.3MPa	
	2			0 to 0.5MPa	
	3			0 to 1MPa	
	4			0 to 2MPa	
	5			0 to 3.5MPa	
	6			0 to 5MPa	
	7			0 to 10MPa	
	8			0 to 20MPa	
⑤ Accuracy	5			±0.5%F.S. (0.5MPa range or greater can be specified)	
	7			±1.0%F.S.	
⑥ Power source	1			24V DC±10%	
	6			12V DC±10% (3-wire system only)	
⑦ Output	1			4 to 20 mA DC (2-wire system)	
	8			1 to 5V DC (3-wire system)	
⑧ Adjustment cable specification (A heat resistant shield cable)	0			Nil	
	1			Cable length: 1 m	
	2			Cable length: 2 m	
	3			Cable length: 3 m (Standard)	
	5			Cable length: 5 m	
	9			Others length specification	
⑮ Document	0			Nil	
	1			Required (Please specify the desired documents separately.) Submission drawings, instruction manual, inspection procedure, mill test report, test report (1 pc 1 copy), inspection / traceability certificate, strength calculation, attended inspection	

Please specify the pressure range and units separately besides selection of range code.

*1 ZT15-1□□, ZT15-2□□, ZT15-A□□, and ZT15-B□□ are non-CE compliant.

*Specify "X" if there is no applicable specification.

Pressure Transmitters, EP Grade CE compliant

Model number configuration

Please specify the model number, each specs and the range for ordering.

Model

Z	T	1	5	—	①	②	③	—	④	⑤	⑥	⑦	⑧	⑨	⑩	⑪	⑫	⑬	⑭	⑮
Pressure Transmitter EP Grade							E							×	×	×	×	×	×	

Model number | Selective spec. | Additional spec. (Option)

① Mounting

C	Type T, External adjustment connector type, CE compliant
D	Type S, External adjustment connector type, CE compliant
M	Type T, Internal adjustment connector type, CE compliant
N	Type S, Internal adjustment connector type, CE compliant

② Connection

			Type S	Type T
3	1/4	Compatible with VCR Male integrated	○	○
4	1/2 (3/8)	Compatible with VCR Male integrated	×	○
N	1/4	UJR Male nut	○	○
P	3/8	UJR Male nut	×	○
Q	1/4	UJR Female nut (Without pure ring)	○	○
R	3/8	UJR Female nut (Without pure ring)	×	○

③ Wetted parts by grade

E	EP Grade ·Pressure sensor: SUS316L (All welding) ·Fitting: SUS316L

④ Pressure range

Please specify the pressure range and units separately besides selection of range code.

C	-0.1 to 0.3MPa
D	-0.1 to 0.5MPa
E	-0.1 to 1MPa
F	-0.1 to 2MPa
1	0 to 0.3MPa
2	0 to 0.5MPa
3	0 to 1MPa
4	0 to 2MPa
5	0 to 3.5MPa
6	0 to 5MPa
7	0 to 10MPa
8	0 to 20MPa

⑤ Accuracy

5	±0.5%F.S. (0.5MPa range or greater can be specified)
7	±1.0%F.S.

⑥ Power source

1	24V DC±10%
6	12V DC±10% (3-wire system only)

⑦ Output

1	4 to 20 mA DC (2-wire system)
8	1 to 5V DC (3-wire system)

⑧ Adjustment cable specification (A heat resistant shield cable)

0	Nil
1	Cable length: 1 m
2	Cable length: 2 m
3	Cable length: 3 m (Standard)
5	Cable length: 5 m
9	Others length specification

⑮ Document

0	Nil
1	Required (Please specify the desired documents separately.) Submission drawings, instruction manual, inspection procedure, mill test report, test report (1 pc 1 copy), inspection / traceability certificate, strength calculation, attended inspection

*Specify "X" if there is no applicable specification.

Pressure Transmitters, GP Grade CE compliant

Model number configuration

Please specify the model number, each specs and the range for ordering.

Model

Z	T	1	5	—	①	②	③	—	④	⑤	⑥	⑦	⑧	⑨	⑩	⑪	⑫	⑬	⑭	⑮
Pressure Transmitter GP Grade							G							×	×	×	×	×	×	

Model number | Selective spec. | Additional spec. (Option)

① Mounting

C	Type T, External adjustment connector type, CE compliant
D	Type S, External adjustment connector type, CE compliant
M	Type T, Internal adjustment connector type, CE compliant
N	Type S, Internal adjustment connector type, CE compliant

② Connection

3	1/4	Compatible with VCR Male integrated
N	1/4	UJR Male nut
Q	1/4	UJR Female nut (Without pure ring)

③ Wetted parts by grade

G	GP Grade ·Pressure sensor: SUS316L (All welding) ·Fitting: SUS316L

④ Pressure range

Please specify the pressure range and units separately besides selection of range code.

C	-0.1 to 0.3MPa
D	-0.1 to 0.5MPa
E	-0.1 to 1MPa
F	-0.1 to 2MPa
1	0 to 0.3MPa
2	0 to 0.5MPa
3	0 to 1MPa
4	0 to 2MPa
5	0 to 3.5MPa
6	0 to 5MPa
7	0 to 10MPa
8	0 to 20MPa

⑤ Accuracy

5	±0.5%F.S. (0.5MPa range or greater can be specified)
7	±1.0%F.S.

⑥ Power source

1	24V DC±10%
6	12V DC±10% (3-wire system only)

⑦ Output

1	4 to 20 mA DC (2-wire system)
8	1 to 5V DC (3-wire system)

⑧ Adjustment cable specification (A heat resistant shield cable)

0	Nil
1	Cable length: 1 m
2	Cable length: 2 m
3	Cable length: 3 m (Standard)
5	Cable length: 5 m
9	Others length specification

⑮ Document

0	Nil
1	Required (Please specify the desired documents separately.) Submission drawings, instruction manual, inspection procedure, mill test report, test report (1 pc 1 copy), inspection / traceability certificate, strength calculation, attended inspection

*Specify "X" if there is no applicable specification.